TOYOTA GAZOO Racing
GR CUP
NORTH AMERICA

2026 GR CUP TECHNICAL REGULATIONS

FEBRUARY 16, 2026

Technical Regulations for Toyota GR Cup 2026

Contents

1 DEFINITIONS 5
1.1 Bodywork 5
1.2 Original 5
1.3 Event 5
1.4 Weight 5
1.5 Recorded Drivers' Weight 5
1.6 Racing Weight 5
1.7 Wheel 5
1.8 Cockpit 6
1.9 Supercharging 6
1.10 Semi-Automatic Gearbox 6
1.11 Location 6
1.12 Position 6
1.13 Orientation 6
1.14 Telemetry 7
1.15 Homologation Form 7
2 REGULATIONS 7
2.1 Role of the SRO 7
2.2 Vehicle Type Eligibility 8
2.3 Eligible Cars 8
2.4 Regulation and Eligibility Amendments 8
2.5 Compliance with the Regulations 8
2.6 Measurements 8
2.7 Material 9
2.8 Data Logging 9
2.9 Telemetry 9
2.10 Other Required Equipment 10

3 BODYWORK 11
3.1 Bodywork 11
3.2 Bonnet and Boot Lids 11
3.3 Windscreen and Windows 11
3.4 Cockpit Ventilation 12
3.5 Protective Nets 12
3.6 Door Protection (Optional) 13
3.7 Aerodynamic Devices 14
4 WEIGHT 14
4.1 Minimum Weight 14
4.2 Ballast Location 14
4.3 Ballast Plates 15
4.4 Adding During the Race 15
4.5 Liquids 15
5 ENGINE 15
5.1 Engine Control Unit 15
5.2 Intake System 15
5.3 Intake System Operation and Tests 16
5.4 Exhaust Design 16
6 FUEL SYSTEM 17
6.1 Fuel Cell 17
6.2 Filling and Venting Device 17
6.3 Fuel Samples 18
7 LUBRICATION SYSTEM 18
7.1 Catch Tank 18
8 ELECTRICAL EQUIPMENT 18
8.1 Battery 18
8.2 Windscreen Wiper 19
8.3 Starting 19
8.4 Lighting Equipment 20
8.5 Reversing Lights 20

8.6 Rain Lights 20
9 TRANSMISSION 20
9.1 Transmission System 20
9.2 Reverse Gear 21
10 AXLES, SUSPENSION AND STEERING 21
10.1 Ride Height 21
10.2 Suspension Type and Mounting 21
10.3 Steering 23
10.4 Power Steering 23
11 BRAKES 23
11.1 Hydraulic Circuits and Tanks 23
11.2 Anti-Lock Braking and Power Braking 23
11.3 Cooling of Brakes 23
12 WHEELS AND TYRES 24
12.1 Dimensions and Materials 24
12.2 Wheel Visibility 24
12.3 Wheel Attachment 24
12.4 Pressure Control Valves 24
12.5 Tire Pressure and Tire Temperature Sensors 24
13 COCKPIT 25
13.1 Equipment Permitted in the Cockpit 25
13.2 Cockpit Exit Time 26
13.3 Test for Helmet Removal 26
14 SAFETY EQUIPMENT 27
14.1 Fire Extinguishers 27
14.2 Safety Belts 28
14.3 Geometric Locations 29
14.4 Anchorage Points 30
14.5 Three Bar Adjusters 31
14.6 Seats and Headrest 31
14.7 Rear View Mirrors 33

14.8 Master Switch 34
14.9 Towing Eyes 34
15 SAFETY STRUCTURES 34
15.1 Safety Cage 34
16 FUEL 35
16.1 Fuel Specification 35
16.2 Air 35
17 INBOARD CAMERA 35
18 FINAL TEXT 35

1 DEFINITIONS

Unless stated otherwise, the definitions of FIA Appendix J Article 251-2 apply.

1.1 Bodywork

All entirely sprung parts of the car in contact with the external air stream, except the parts associated with the mechanical functioning of the engine, transmission and running gear.

Any air intake shall be considered to be part of the bodywork.

1.2 Original

As fitted to the SRO Motorsports Group-approved series-produced car and in compliance with their Homologation Form.

1.3 Event

An Event is made up of one or several of: Competition, Parade, Demonstration or Touring Assembly.

1.4 Weight

Is the weight of the car without the driver at any time during the event and its eventual ballast.

1.5 Recorded Drivers' Weight

The weight of the driver outfitted with all protective clothing, helmet, and FHR.

1.6 Racing Weight

Is the weight of the car in running order with the recorded drivers' weight and empty of fuel in its tank.

1.7 Wheel

Wheel: Flange and rim.

Complete wheel: Flange, rim and tire.

1.8 Cockpit

Closed car: The interior volume of the main structure which is reserved for the occupants.

Its limits are defined by the roof, the floor, the doors, the lateral parts, the glazed parts and the front and rear bulkheads.

Open car: The cockpit opening must be symmetrical as viewed from above, and nothing is permitted to cover it except for a hood or a hard-top.

1.9 Supercharging

Increasing the weight of the charge of the fuel/air mixture in the combustion chamber (over the weight induced by normal atmospheric pressure, ram effect and dynamic effects in the intake and/or exhaust system) by any means whatsoever.

The injection of fuel under pressure is not considered to be supercharging.

1.10 Semi-Automatic Gearbox

One which, when the driver calls for a gear change, takes over the control of one or more of the engine, clutch, and gear selectors momentarily to enable the gear to be engaged.

1.11 Location

A site defined relative to the original: center line of the car, axles center (middle of the wheelbase on the center line), cockpit, luggage compartment and engine compartment.

Location within the engine compartment is a site defined relative to the crank case and cylinder head(s).

1.12 Position

The site defined by dimensions from the original vehicle data, e.g. axles center and center line of the car.

1.13 Orientation

Is the relationship of the component to the longitudinal and transversal axes of the vehicle. If the component is turned 180°, this will be regarded as a change in orientation.

1.14 Telemetry

The transmission of data between a moving car and anyone connected with the entry of that car. Any form of real-time or delayed wireless data transmission from the car shall be considered telemetry unless explicitly permitted.

1.15 Homologation Form

All cars approved by SRO Motorsports Group will be the subject of a descriptive form called Homologation Form issued by the SRO on which shall be entered all data enabling identification of the said model.

The presentation of the forms at scrutineering and/or at the start may be required by the organizers who will be entitled to refuse the participation of the entrant in the event in case of non-presentation.

The form presented must imperatively be printed on "SRO watermarked" paper, signed by TRD and/or the Series and be joined with an SRO Technical Department certificate on which the chassis number and owner of the car are mentioned.

This form will be valid for that event throughout the duration of the said event. In case of any doubt remaining after the checking of a model of car against its Homologation Form, the scrutineers may refer either to the maintenance booklet published for the use of the make's distributors or to the general catalogue in which are listed all spare parts.

In case of lack of sufficient accurate documentation, scrutineers may carry out direct scrutineering by comparison with an identical part available from a concessionaire.

It will be up to the competitor to obtain the Homologation Form concerning his car from TRD and/or the Series.

2 REGULATIONS

2.1 Role of the SRO

The following technical regulations for the Toyota GR Cup Cars are issued by SRO Motorsports Group.

2.2 Vehicle Type Eligibility

For a vehicle to be eligible in the Toyota GR Cup class, it must be a car approved by SRO Motorsports Group and comply with the Toyota GR Cup Car homologation. Only Toyota GR Cup cars manufactured by TRD are eligible. Cars created in the likeness of the Toyota GR Cup car but not manufactured by TRD are not eligible.

2.3 Eligible Cars

The homologated Toyota GR Cup car is the only car eligible for the Toyota GR Cup.

2.4 Regulation and Eligibility Amendments

SRO will publish any changes made to these regulations. All such changes will come into effect after their publication.

Changes for safety reasons may be made without notice.

2.5 Compliance with the Regulations

The car entered by a competitor must conform strictly to its Homologation Form as well as to any additional notification from TRD and/or the Series.

It is the duty of each competitor to satisfy the Scrutineers and the Stewards of the Meeting that his car complies with these regulations in their entirety at all times during an event.

The Stewards of the meeting may exclude a car, the construction of which is deemed to be dangerous.

2.6 Measurements

All measurements must be taken while the car is stationary on a flat horizontal surface or as stated in the Sporting Regulations or supplementary regulation of the relevant Series.

Before the start of an Event, the scrutineers stipulate the place where the ride height and weights will be checked. It’s the competitor’s responsibility to inform themselves about this place.

The competitor has the possibility, during the time set up by the organizer, to ensure the conformity of his car by using the official control equipment, at the official place of scrutineering.

2.7 Material

Titanium is not permitted unless used in the original part or explicitly authorized by these regulations.

The use of a material which has a specific yield modulus greater than 40 GPa/g/cm3 is forbidden for the making of all parts that are free or homologated as an Option Variant.

This restriction does not concern the parts homologated with the standard vehicle. The use of magnesium sheet less than 3 mm thick is forbidden.

2.8 Data Logging

The car must be fitted with the homologated data logging system. SRO Motorsports Group can ask to add some extra sensors to provide additional data.

The data thus collected must remain at the disposal of TRD and/or the Series which is used for scrutineering.

The competitor is responsible for the proper functioning of this system.

Technicians specialized in electronic systems in order to ensure the correct operation and the conformity of the readings of the SRO data logging system and the conformity of the various systems with which the cars are equipped, can assist the Technical Delegate.

They may at any moment remove, exchange or control the various electronic components of a car and draw up a report to the Technical Delegate on their investigations, and they reserve the right to keep the components they have removed for later analysis.

No protest will be accepted concerning these controls and removed components. If a case of non-conformity is noted (either during or after the Event), the customary procedures will apply (a report will be drawn up by the Technical Delegate on approval of the Chief Scrutineer and forwarded to the Panel of Stewards for a decision).

The homologated data logger must work throughout the Event, including during every practice, and controls may be carried out at any time. Competitors cannot leave the Event before their data loggers have been downloaded or unless the Stewards have given their consent for them to leave.

2.9 Telemetry

Only the homologated telemetry system is permitted.

2.10 Other Required Equipment

Required Equipment may change on a series or location basis.

SRO America requires all Toyota GR Cup participants to use:

1. Lumirank Position Panel
2. Lumirank Driver Information Display
3. MyLaps RaceLink System
4. MyLaps TR2 Direct Power Transponder

The installation of the MoTeC and MyLaps RaceLink antennas must be on the roof, off the centerline and a minimum of 20cm from any other antenna.

Further information can be found in the SRO MoTeC Series Spec Logger Handbook, Lumirank and MyLaps RaceLink Telemetry handbook, and Transponder and Driver ID handbook available on the Teams website.

1. Shark Fin Antenna (VBOX, Bosch Telemetry
2. Driver Radio Antenna
3. SRO Telemetry Antenna
4. SRO Marshalling GPS Antenna
5. Flat Patch Antenna (Optional)

Antennas must be mounted externally at location shown. All antennas must be at least 20 cm from each other and 15 cm from the edge of roof or windshield. No other antennas are permitted within 20 cm of these units. Scrutineering may require that any antennas be moved.

3 BODYWORK

3.1 Bodywork

All bodywork dimensions and shape must remain as homologated. Any non-movable element must be attached with the use of tools.

The front and rear overhangs must remain as homologated.

Material used for the bonnet and boot lids, bumpers, doors and wings must remain original or as described on the Homologation of the car. Where an element is replaced, it must be attached in a way, which is at least as strong as the original method, and any non-moveable element shall be attached with the use of tools.

All bodywork repairs must be completed to the satisfaction of the Series and TRD. All repairs must be presented to scrutineering before the car is permitted to start or re-join an Event or Session. This Scrutineering can take place in the Series scrutineering area or the Competitors paddock space. For repairs during a session, the judgement of the Pit Lane officials will be respected.

The use of tape for aerodynamic benefit (i.e. taping seams, taping duct work, etc.) is prohibited.

All Toyota emblems must remain on the vehicle bodywork throughout the event.

3.2 Bonnet and Boot Lids

They must have at least two safety fasteners, both of which are clearly indicated by red (or contrasting color) arrows. It must be possible to remove or open them without the use of tools. A waiver by the SRO Technical Department can be given for special constructions. These constructions must be described in the cars Homologation Form.

All bodywork joints in the vicinity of the refueling connections must be designed in such a way as to prevent any leakage of fuel into the engine compartment and/or cockpit during refueling.

3.3 Windscreen and Windows

To protect the windscreen, the addition of a maximum of four (4) translucent films on its external face is permitted.

Additional fastenings may be used for securing the windscreen.

3.4 Cockpit Ventilation

Must retain the homologation vents. No modification is permitted.

3.5 Protective Nets

A rectangular protective net is required for all cars.

A center protective net on the Driver's inboard side is also mandatory.

All protective nets must comply with FIA Appendix J Article 253.

They must meet the following specifications:

1. The net must be made up of woven strips at least 19 mm (3/4") wide.
2. The meshes must be a minimum of 25 x 25 mm and a maximum of 60 x 60 mm.
3. The woven strips must be non- flammable and sewn together at each point of crossing.
4. The net must not be of a temporary nature.
5. viewed from the side, it must reach from the center of the steering wheel to the B-pillar.

The protective net must be attached to the homologated mounting points (see the homologation form of the car) and must be installed in accordance with the installation specifications published by the manufacturer/supplier instructions. Quick release systems of both nets must be able to be opened by both the driver when seated in racing position with tightened seat-belts as well as by rescue crews.

Signage or equipment may be attached to nets provided:

1. The designed purpose of the net is respected.
2. Visibility over and/or through the net is unobstructed.

Fixation:

1. The net must be attached either to the safety cage or to a fixed part of the bodywork, above the driver's window, by means of a rapid release system that will function even if the car turns over.
2. It must be possible to detach the net with one hand. To this end, the handle or lever must have colored markings ("dayglo" orange).
3. A push-button release system is authorized provided that it respects the prescriptions of this article. The pushbuttons must be visible from the outside, be of a contrasting color and be marked "press".

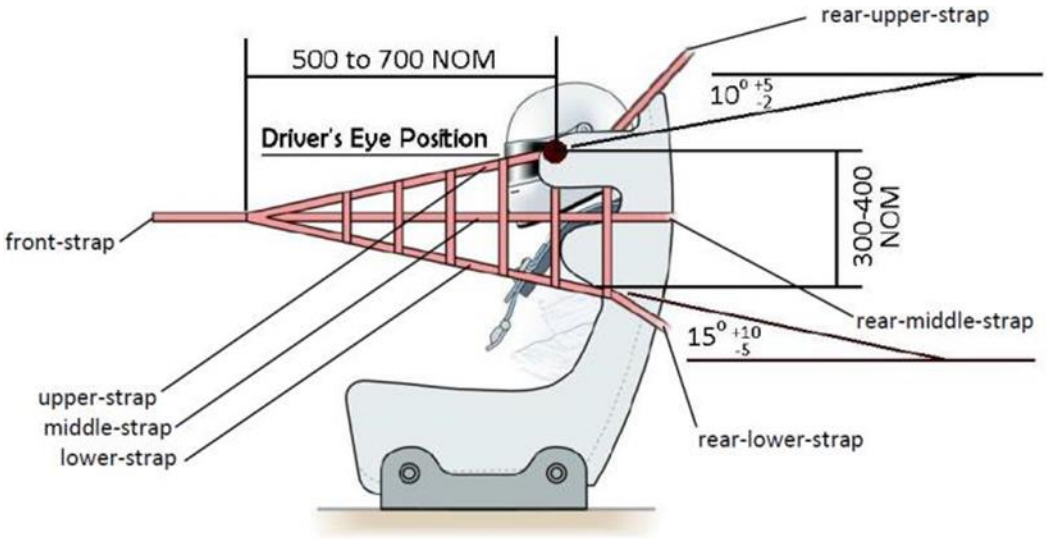

3.6 Door Protection (Optional)

The removal of door soundproofing material is allowed with no other modification. Installation of foam in a crushable structure* to protect against lateral collisions is strongly recommended.

If equipped, it must be similar to Drawing 255-14 and be secured to the safety cage or to the bodyshell, and its minimum height must extend from the bottom of the door to the maximum height of the door crossbar.

If the rearmost point of the driver's shoulders is rearward of the B-pillar, the side protection panel is compulsory up to that point on the rear door as well, and it must be secured to the safety cage or to the bodyshell.

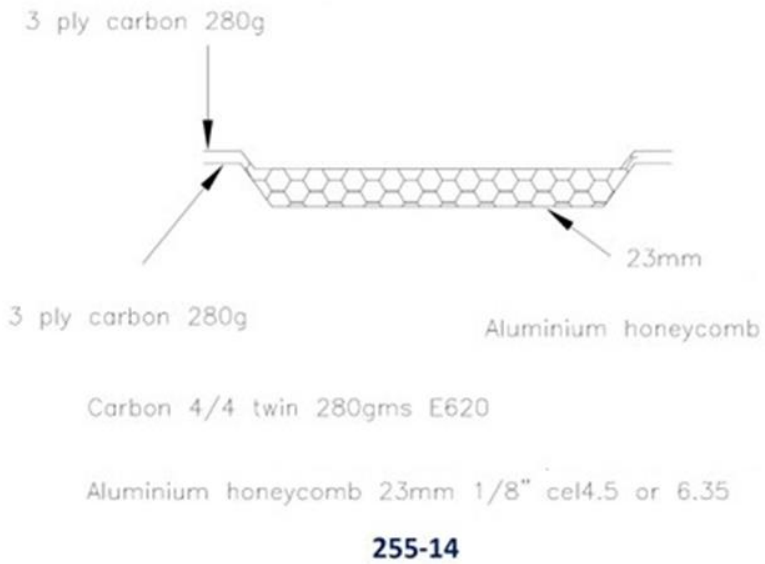

255-14

* Crushable structure:
Sandwich construction with a minimum thickness of 10 mm, made of a core (minimum crushing strength of 18N/cm^2) and of two skins of 1.5 mm minimum thickness (minimum tensile strength of 225N/mm^2). Composite material authorized.

3.7 Aerodynamic Devices

Must remain as homologated. The rear wing is permitted to be adjusted within homologation range. Front splitter must remain as homologated.

4 WEIGHT

4.1 Minimum Weight

The minimum racing weight with the recorded drivers' weight and empty of fuel is 1,320 kg and must be respected at all times during the event. It is permitted to complete the racing weight of the car by one or several units of ballast.

4.2 Ballast Location

Ballast must be secured to the passenger seat mounting locations and must be according to the specifications of FIA Article 257A concerning the dimensions and characteristics of the fixations.

The securing system must allow seals to be affixed to the ballast by the scrutineers and must be designed such that tools are required for its removal.

Any movable ballast system when the car is in motion is forbidden.

4.3 Ballast Plates

All ballast (only the weight of the stacking metallic plates) must comply with the following points:

1. Only the homologated plates (part no. TRD104-A3103) may be used.
2. The plates must be installed according to instructions listed in Toyota GR86 Customer Operation Manual.
3. The height of the stacking plates is limited at 20 cm.
4. This ballast must be secured in the cockpit in the passenger's location on the homologated mountings.

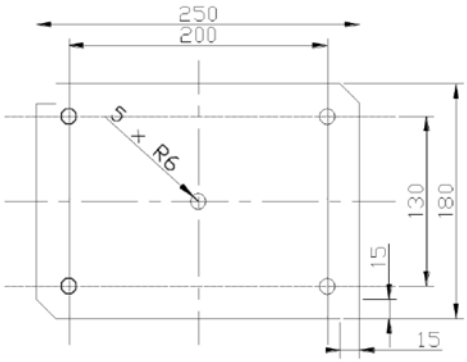

257A-1

4.4 Adding During the Race

The adding to the car during the race of any solid material whatsoever, and the replacement during the race of any part of the car with another which is materially heavier, are forbidden.

4.5 Liquids

The weight may be checked at any time during the event with the quantity of liquids remaining in the tanks, except after any official session, when the car must be emptied of all the fuel before weighing.

5 ENGINE

5.1 Engine Control Unit

The Technical Delegate may at any time oblige the competitor to use the reference unit registered with the SRO Motorsports Group by TRD.

5.2 Intake System

The intake system is defined by the assembly comprising the air filter, air filter housing, all connecting tubes, all flexible couplers, restrictor(s) (if applicable) and the manifold up to the intake ports on the cylinder head(s). All components must remain as homologated.

5.3 Intake System Operation and Tests

1. All the air feeding the engine must pass through the homologated Intake System and no non-homologated pipe containing air is permitted to enter or to exit from the intake system.
2. Sealing the Intake System must cause the engine to stop immediately.
3. This check must be carried out at an engine speed of 2500 rpm, the pressure sensors present inside the intake system being connected.
4. The depression measured in the intake system when the engine stops must be at least equal to the atmospheric pressure in the place where the check is performed.

5.4 Exhaust Design

The exhaust system must remain as homologated.

Noise Levels

The noise generated by the car must not exceed 110 dB (A) at 3800 rpm, or at three-quarter of the engine's homologated maximum RPM if this is less. This measurement will be taken at a distance of 0.5 m and at a 45-degree angle to the point of exit of the exhaust.

All measures taken to ensure that the maximum noise limits are not exceeded must be permanent in nature, and must not be cancelled out by the exhaust gas pressure. Exhaust gas may only exit at the end of the system.

Parts of the chassis must not be used to evacuate exhaust gases. Exhaust line protection are allowed.

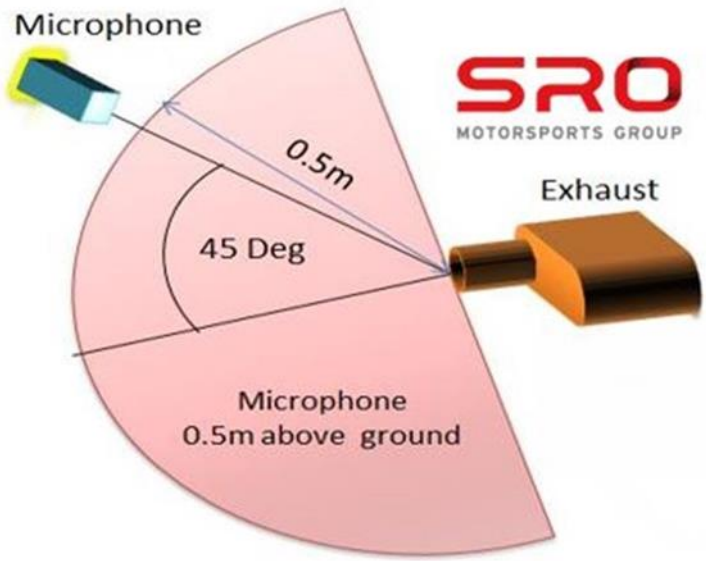

6 FUEL SYSTEM

6.1 Fuel Cell

All fuel tanks must be Homologated, and the position and orientation as defined in the homologation form.

All fuel lines must comply with the specifications of FIA Article 253-3.

It is recommended that the tank be filled with MIL-B-83054, SAE-AIR-4170 (MIL-F87260 recommended in case of quick refueling) type safety foam.

Any fuel fitting which is part of the cell walls (air vents, inlets, outlets, tank fillers, inter tank connectors, and access openings) must be made of metal or composite and bonded into the fuel tank.

The volume of the fuel cell must remain as homologated, no modification of the cell is permitted.

6.2 Filling and Venting Device

Coupling must comply with the basic homologation form or the VO form for endurance. They may be either combined or single units fitted on both sides of the car.

For races where refueling take place, they must be equipped with leak proof dry break couplings complying with the dead man principle (without retaining device when in an open position).

Couplings dimensions:

FIA Appendix J - Diagrams 252.5.A with internal diameter D ≤ 2" or Diagrams 252.5.B.

Locations:

1. Above the complete wheels, within the track of the nearest axle, where they are not vulnerable in the event of an accident.
2. They must not protrude beyond the bodywork surface.
3. They must be located at least 300 mm rearwards from a vertical line passing by the rearmost point of the exhaust pipe exits (not applicable in case of rear exit) and in any case, so that eventual fuel spilling do not result in fuel falling over the exhaust pipe.
4. Filling devices may be installed in the side rear windows provided they are separated from the cockpit and the engine compartment by a firewall or fireproof sleeve.

The vent and filler spouts may pass through the cockpit as close to the walls as possible.

Their pipes must be made from metal or flame resistant/flame retarding material and their connectors from material identical to that used for the walls of the tank.

They must be isolated from the cockpit by means of a leak-proof protection.

6.3 Fuel Samples

All cars must be fitted with a self-sealing connector, which can be used by the Scrutineers to obtain samples of the fuel feeding the engine. This connector must be a FIA approved self-sealing connector, fitted immediately before the injectors (see FIA Technical List n°5).

7 LUBRICATION SYSTEM

7.1 Catch Tank

The lubrication system must remain as homologated. No parts may be added or removed.

8 ELECTRICAL EQUIPMENT

8.1 Battery

Whenever possible, the battery must be an Optima Batteries branded unit. The application catalogue can be found at: www.optimabatteries.com. If Optima Batteries does not manufacture a properly fitting unit, proof of this exclusion must be presented to Initial Scrutineering at each competitor's first event. Also, if Optima Batteries does not manufacturer a proper fitting unit an Optima Batteries decal must be installed on the cover or box.

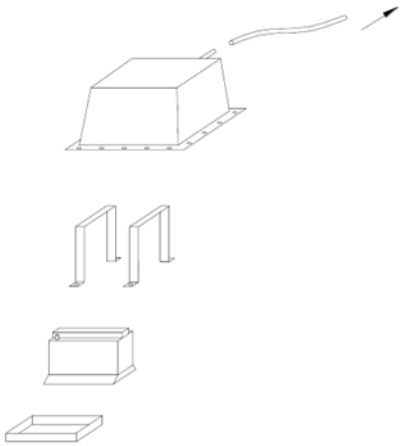

255-10

Batteries may be situated in the cockpit but without obstructing the exit of the driver.

Batteries must be securely fixed to the body shell and completely surrounded by a box made of insulating material that includes an air vent which exits outside the cockpit. Alternatively, OEM battery mounts may be used with insulating material covering the terminals.

If the battery situated in the cockpit is a dry battery, it must be protected electrically by a cover which covers it completely. The attachment to the body shell must consist of a metal seat and two metal clamps, with an insulating covering, fixed to the floor by bolts and nuts.

For attaching these clamps, bolts with a diameter of at least 10 mm must be used, and under each bolt, a counter plate at least 3 mm thick and with a surface of at least 20 cm2 beneath the metal of the bodywork (see Drawings 255-10 and 255-11).

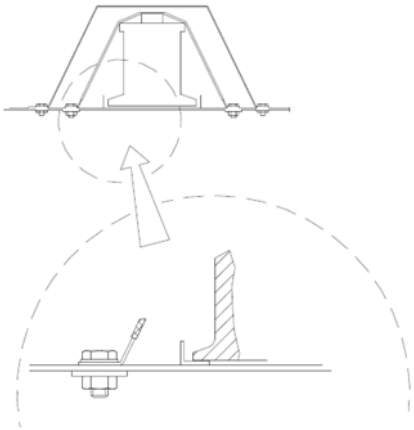

255-11

A secondary battery may be installed provided it meets the following requirements:

1. Secondary batteries may only be used to power a driver cooling system.
2. Secondary batteries must not be connected to the vehicle's existing power or electrical systems. Secondary battery wiring must be fully isolated from OEM vehicle wiring looms and must not share grounding or power circuits.
3. All secondary batteries must be securely mounted inside the safety structure directly to the vehicle unibody or the approved ballast assembly. No additional brackets, mounting structures, or fabricated supports may be used. The battery containment tray must be correctly sized for the battery used.
4. All battery terminals must be covered.
5. All positive leads from the secondary battery must include a fuse or circuit breaker as close to the terminal as possible (e.g., within 6 inches).

8.2 Windscreen Wiper

The car must be fitted with a windscreen wiper system, which must be in working order throughout the event. Only the blades may be replaced.

8.3 Starting

A starter must be fitted and be in working order at all times during an event. The driver must also be able to operate the starter when seated normally.

8.4 Lighting Equipment

All lighting equipment must be in working order throughout the event.

The exterior lighting equipment must at least ensure the following functions: Headlights, direction indicators, stop lights, rain light (3rd brake light) and rear sidelights. For safety reasons, it is obligatory for headlights to produce a white beam.

For races run at night, the front bumper may be modified to accommodate supplementary lighting. These modifications must not create any aerodynamic downforce.

8.5 Reversing Lights

The bulbs of the reversing lights must be removed.

8.6 Rain Lights

One rain light approved according to the ECE R38 road standard (or an equivalent or stricter standard from another country) or approved by the FIA (Technical List n°19) is compulsory at the back of the car and it must be in working order throughout the event.

It must be:

1. A model approved by the FIA (Technical list n°19), or an original third stoplight.
2. Directed to the rear at 90° to the car center line.
3. Clearly visible from the rear.
4. Mounted not more than 10 cm from the car center line.
5. At least 35 cm above the reference plane.
6. At least 45 cm behind the rear wheel center line, measured to the face of the lens and parallel to the reference plane, or as on the series-produced car.
7. Able to be switched on by the driver when seated normally in the car. The three measurements are taken to the center of area of the lens.

9 TRANSMISSION

9.1 Transmission System

Must remain as homologated. For safety reasons, the transmission must be designed in such a way that if the car is stopped and the engine is stalled, it is possible to push or tow it.

If needed, protection for gearbox components can be authorized, after approval by TRD or SRO.

9.2 Reverse Gear

All cars must have a reverse gear, which at any time during the event, can be selected while the engine is running and be used by the driver when seated normally.

10 AXLES, SUSPENSION AND STEERING

10.1 Ride Height

All ride height and rake adjustments must be made using the homologated spring perches.

For the checking of the ride height, the pressure of the tires must not be less than 2.0 bar. If the pressure is less than 2.0 bar when scrutineering, the pressure may be raised to maximum 2.0 bar. All measurements will be taken at the homologated points.

10.2 Suspension Type and Mounting

All suspension components, apart from parts specifically mentioned below must be original equipment supplied by TRD and comply with the Homologation Form.

The position of the suspension and the steering box (rack or other) anchorage points on the chassis must be as homologated.

Only the homologated anti-roll bars are permitted. They may be disconnected but must remain installed.

Shock absorbers are detailed in the Homologation Form and must comply with it. The working principle (valving) is sealed, tampering with the seal, construction, or working principle in not permitted. The homologated damper pressure range must be respected at all times. All damper compression and rebound adjustments must be made using the JRi adjustment knobs.

No electrical, hydraulic or pneumatic connection between the shock absorbers is permitted.

The use of thermal insulation tape on rear damper reservoirs is permitted under the following conditions:

1. Thermal insulation tape may only be applied to the cylindrical outer surface of the rear damper reservoir body.
2. The tape must not obstruct or interfere with any scrutineering-related components or access points, including but not limited to Schrader valves and identification markings.
3. The maximum allowable tape thickness is 3.175 mm (0.125 in), including adhesive, measured at any point.
4. The tape may be applied in multiple layers. Overlapping, stacking, or spiraling of tape is permitted, provided the maximum thickness requirement is not exceeded.
5. Only commercially available thermal insulation tapes are permitted.
6. Custom-made insulation, multi-layer composite wraps, or bespoke thermal shielding solutions are prohibited.

Any homologated spring may be used on any corner of the car. Only homologated springs and bump stops are permitted.

The use of spring rubbers or any device that serves the same purpose is not permitted.

The modification or adjustment of spring, shock absorber and anti-roll bars adjustments from the cockpit is prohibited.

Per homologation Erratum 02/02 ER dated March 18th, 2024, the maximum negative camber is Front -5.0º and Rear -2.0º. The following are pressure and camber recommendations from Continental:

Camber Maximum Vs. Pressure Minimum Table

240/640R18 GR Cup Slick			
Application	Circuit		
Car Type	Toyota GR86		
Rim Specification	18 x 8		
Minimum Cold Pressure	20 psi		
Starting Cold Pressure	20 psi	22 psi	24 psi
Minimum Operating Hot Pressure	30 psi	32 psi	34 psi
Maximum Camber	-4.0°	-4.5°	-5.0°

10.3 Steering

The steering lock must be dismounted and the column adjusting system must be locked. The steering wheel may be fitted with an approved quick release system.

The quick release mechanism may consist of a flange concentric to the steering wheel axis, colored yellow through anodizing or any other durable yellow coating and installed on the steering column behind the steering wheel. The release must be operated by pulling the flange along the steering wheel axis.

10.4 Power Steering

For cars fitted with automatically variable power steering, the Technical Delegate may at any time oblige the competitor to use the reference unit registered with the SRO Motorsports Group by TRD.

11 BRAKES

11.1 Hydraulic Circuits and Tanks

The complete braking system must incorporate at least two separate circuits operated by the same pedal.

This system must be designed so that if leakage or failure occurs in one circuit, the pedal shall still operate the brakes on at least two wheels. The brake system must adhere to the Homologation Form.

The balance of the braking forces between the front and rear axles may not be adjusted.

11.2 Anti-Lock Braking and Power Braking

The Technical Delegate may at any time oblige the competitor to use the reference unit registered with the SRO Motorsports Group by TRD. The ABS system may be adjusted by competitors via the dashboard, any ABS adjustments made outside of the dashboard are not permitted.

11.3 Cooling of Brakes

Must remain as homologated. May only be changed via a bulletin from the SRO Toyota GR Cup Bureau and then only with the parts and methods documented in the bulletin.

12 WHEELS AND TYRES

12.1 Dimensions and Materials

Measurements will be taken horizontally at axle center line height.

12.2 Wheel Visibility

The complete wheel above the hub center line must not be visible in plan view and when viewed from the front, with the wheels aligned for the car to proceed straight ahead.

12.3 Wheel Attachment

Wheel attachment principle must remain as homologated. The wheel nuts may not be changed except by Manufacturer bulletin.

Air extractors added on the wheels are forbidden.

12.4 Pressure Control Valves

Pressure control valves on the wheels are forbidden.

12.5 Tire Pressure and Tire Temperature Sensors

Adjustments to tire pressures are permitted if the tire pressure remains within the tire manufacturer's requirements.

Tire pressures will be set to 2.0 Bar for all ride height checks.

The minimum dry tire starting pressure is 1.37 Bar (20 psi) and will be enforced by random checks on pre-grid and grid.

13 COCKPIT

13.1 Equipment Permitted in the Cockpit

All items on the list below are included in the minimum weight of the car. The only components which can be added in the cockpit are:

1. Safety equipment and structures
2. Seat, instruments and any other controls necessary for driving including the brake power distributor switch
3. Electronic and electrical equipment
4. Driver cooling system
5. Ballast
6. Battery
7. Driver ventilation equipment
8. Plague or decal with car number and Driver's last name, sponsors are permitted but may not hinder the legibility of the car number or Driver's name, see Article 18

None of the above items may hinder cockpit exit or the driver's visibility.

The above components must be covered where necessary by a rigid protective material to minimize injury, and their mountings must be able to withstand 25 G deceleration. Additional fixations to any cockpit equipment may be requested at any time during an Event.

Mounting Driver cooling and/or ventilation systems outside of the safety structure is prohibited. Driver cooling and/or ventilation systems may be mounted to the top of the ballast stack. Modifications may be made to the top plate to meet these requirements.

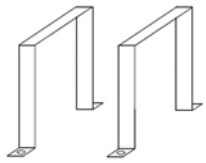

Driver cooling and/or ventilation systems of any nature must be restrained by all of the following:

1. Base bracket affixed by device manufacturer methods.
2. A pair of 1" wide steel strap going over the top of the device that is bolted to the unibody of the car.
3. The bolts retaining the strap must feature 1/8" thick by 2" outer diameter washers on both sides of the unibody material, sandwiching the unibody material.

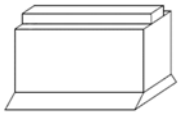

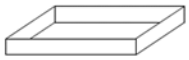

Entrants are permitted to apply non-slip adhesives to the surface of driver pedals. Lines containing cooling water or lubricating oil must be outside the cockpit.

Thermal tape, insulation, heat shields, or insulated panels will be allowed on the interior and exterior of the GR86 Cup car at the tunnel, firewall, or footwell area to help shield or deflect exhaust heat from the vehicle cabin.

The addition of these heat deflecting/shielding items must not enhance performance or create an aerodynamic advantage in any way.

It is not advised to install bulky insulation near the drivers' pedals as interference could occur. If insulation is desired in this area, an adhesive backed reflective type barrier that will not lift is recommended.

SRO Motorsports Group has all rights to ask that any piece of insulation or shielding be removed if they suspect it is being used for anything other than the intended purpose of reducing cabin temperatures or installed in an unsafe manner.

13.2 Cockpit Exit Time

The driver, seated in his normal driving position, must be able to get out from the cockpit in 7 seconds through the driver's door and in 9 seconds through the passenger's door.

For the purposes of these tests, the driver must be wearing all normal driving equipment, the seat belts must be fastened, the steering wheel must be in place in the most inconvenient position, and the doors must be closed.

13.3 Test for Helmet Removal

With the driver seated in his normal driving position in the car with which he/she is entered, wearing a cervical collar appropriate to his/her size and with the seat harness tightened, a member of the medical service must demonstrate that the helmet which the driver will wear in the race can be removed from his head without bending his neck or spinal column.

14 SAFETY EQUIPMENT

14.1 Fire Extinguishers

The use of the following products is prohibited: BCF, NAF

All cars must be equipped with an extinguishing system homologated by the FIA in accordance with Article 253-7.2, except as regards the means of triggering. All extinguishers must be adequately protected.

Only extinguisher systems listed on "FIA Technical List No.16" or the Non-pressurized systems listed on "FIA Technical List No. 52" are permitted.

It is a mandatory requirement that all extinguishers must:

Technical List 16 Example

Technical List 52 Example

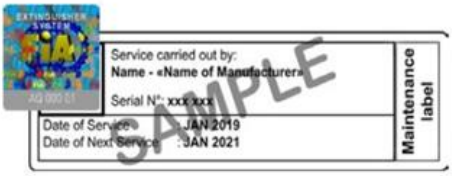

1. Be situated within the survival cell at a distance greater than 300mm from outer edges of bodywork.
2. Operate in any position, even if the car is inverted.
3. Have a self-test method for either pressure checking systems on FIA Technical List No. 6 or the triggering mechanism in the NON-pressurized systems listed on FIA Technical List No. 52.
4. Withstand a deceleration of 25g and operate between temperatures of –15 Deg. C to +80 Deg. C.

A means of triggering from the outside, possibly combined with the circuit breaker and operated by a single lever, must be present at the bottom of the windscreen on the left side.

It must be marked with a letter "E" in red inside a red-edged white circle at least 100 mm in diameter and:

1. Be removable for verification of full charge or label inspection.
2. Be capable of being activated by the driver whilst belted in the seat with steering wheel in place.
3. Use a trigger system independent of vehicle electrics with a secondary EXTERNAL cut-off switch or cable. The switches location must be indicated by an E fire decal of 10cm.
4. Be serviced and recertified by the Manufacturer every two (2) years.

Fire E Decal

14.2 Safety Belts

The wearing of two shoulder straps, one lap strap and two crotch straps is compulsory.

For FIA 8855-1999, 8862-2009, or 8855-2021 seats safety harnesses in compliance with FIA Standard 8853-2016 (Technical List n°57) are compulsory. SFI 16.5 belts are permitted with SFI 39.2 seats.

It must have a minimum of five (5) anchorage points.

The harness must be used in accordance with FIA Article 253-6 of Appendix J. Elastic devices attached to the shoulder straps are forbidden. Individual belt straps must be independent; any method or attempt to combine individual straps is prohibited. Safety belt installation must be performed in accordance to the instructions provided by the system supplier and/or manufacturer. All belt components must be used as intended by the Manufacturer, mixing belt components between Manufacturers or certifications is prohibited.

It is prohibited for the seat belts to be anchored to the seats or their supports.

14.3 Geometric Locations

The geometrical locations of the anchorage points are shown in Drawing 253-61.

Shoulder straps must be directed towards the rear and not making an angle of more than 20° to the horizontal from the upper rim of the backrest. It is preferred that this angle does not exceed 10°.

Maximum angles in relation to the centerline of the seat are 25° divergent or convergent (shoulder straps may be installed crosswise symmetrically about the centerline of the seat).

FIA Appendix J ART 253 Restraint Locations

Drawing 253-61-a

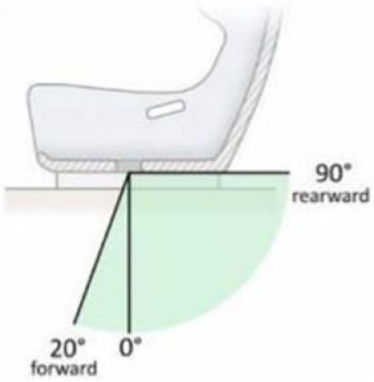

Drawing 253-61-b

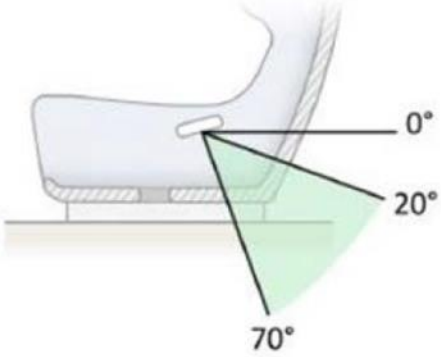

Drawing 253-61-c

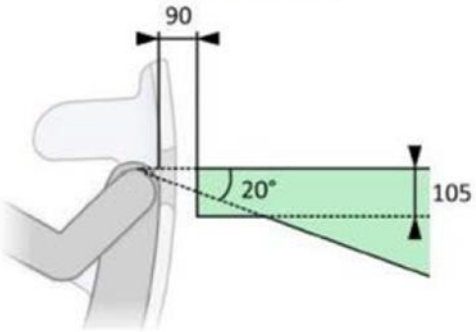

Drawing 253-61-d

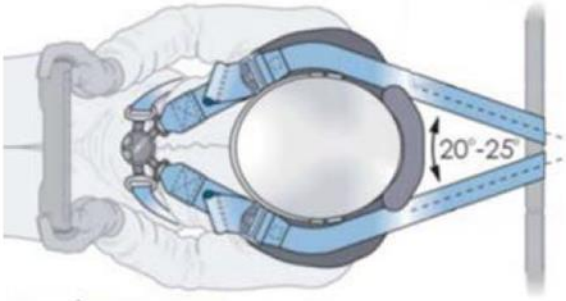

14.4 Anchorage Points

The lap and crotch straps shall only pass through the seat. All lap straps must fit tightly in the bend between the pelvic crest and the upper thigh. Under no conditions must they be worn over the region of the abdomen.

Care must be taken that the straps cannot be damaged through interference, twisting, edge loading or chafing against sharp edges. Two-inch lap belts are highly recommended as they have been shown to provide faster loading of the lap belt resulting in lower loads to the chest, head, and neck. Their fitment around the pelvis is better allowing the belt to be worn tighter while being more comfortable and easier to adjust.

FIA Appendix J Article 253 Anchorage Mounting Seat belts cannot be anchored to the seats or their supports. Approved mounting techniques are shown below:

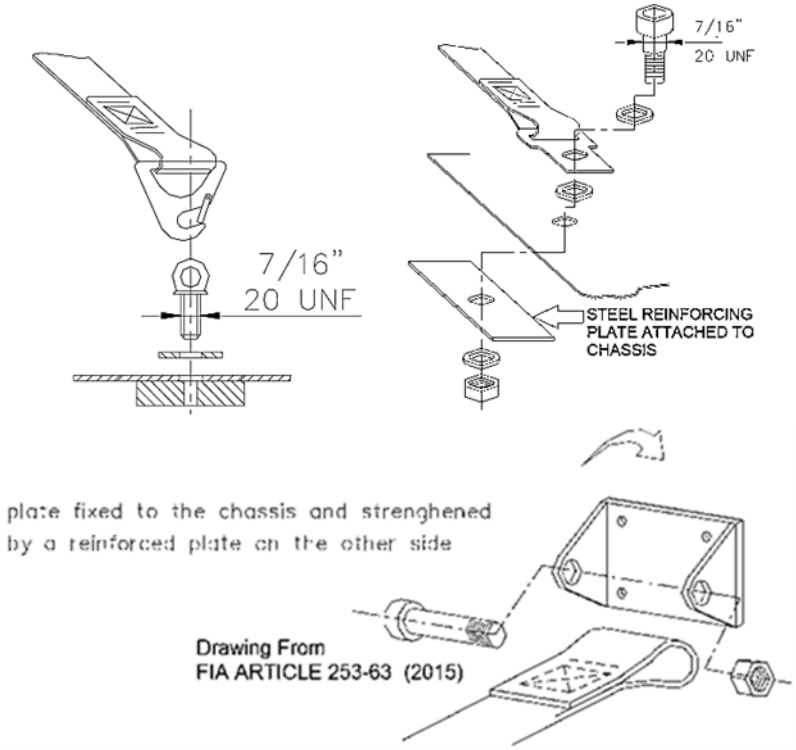

The minimum thickness of the supports and counter plates is 3 mm (0.12 in) for steel and 5 mm (0.2 in) for light alloy materials (unless otherwise stated on drawings).

The minimum longitudinal dimension of each support is 6 cm (2.36 in).

Safety harnesses may not be anchored to the seat or its supports unless explicitly permitted by the seat manufacturer.

14.5 Three Bar Adjusters

3-bar adjusters may be used for wrap mounting shoulder belts around harness bars or leg straps around mounting bars, the must be compliant with FIA 8853-2016. They shall be placed as close to the mounting points as possible. The figures below show the correct wrapping techniques which must be adhered to.

Three Bar Adjusters Step 1

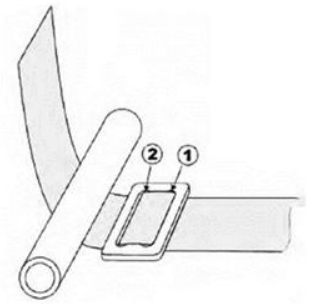

Three Bar Adjusters Step 2

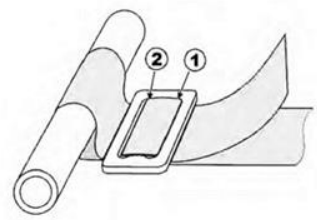

Three Bar Adjusters Step 3

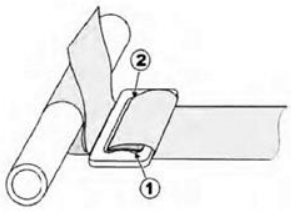

Three Bar Adjusters Step 4

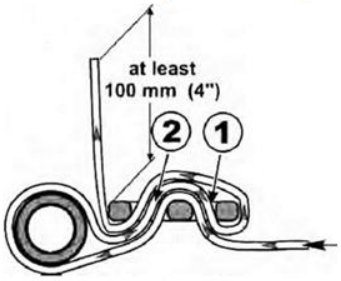

14.6 Seats and Headrest

The driver's seat must comply with FIA standards 8855-1999, 8862-2009, or 8855-2021 or SFI 39.2. FIA Standard 8855-2021 is recommended. Changing the seat with another FIA or SFI 39.2 compliant seat to maximize the driver fit is permitted. Chassis and roll cage modifications for seat installation are prohibited.

If a SFI 39.2 seat is chosen the seat must meet the following requirements:

1. Seats must be mounted in accordance with the manufacturer's instructions.
2. Competitors are required to present the manufacturer's mounting instructions during pre-qualifying inspection.
3. When available, the manufacturer's seat mount must be used.
4. When equipped with an integral back-mount bracket, the seat back must be attached to the roll cage using a clamp-style mount. Welding directly to the roll cage is prohibited.
5. The seat must fit within the OEM chassis driver seat area.

Any custom mounts for SFI seats must be approved by the Technical Manager. At his discretion, the Technical Manager may require a team to return to the homologated seat, mount, and belts.

Energy-absorbing and non-flammable material must be situated around the driver's head. The surfaces or cladding materials of components added to the homologated seat must be non-flammable (e.g. flammability test in accordance with ISO standard 3795.

If equipped with an 8862-2009 or 8855-2021 compliant seat and there is a cushion between the homologated seat and the occupant, the maximum thickness of this cushion is 50 mm.

If a foam insert is used between the homologated seat and the driver, minimum lateral support to the driver's head, shoulders and pelvis must be guaranteed as follows:

1. 230mm minimum at seat-side-head support along the head-plane.
2. 180mm minimum at seat-side-shoulder support along the shoulder-plane.
3. 100mm minimum in height at seat-side-pelvis support along the pelvis-plane over a length of 200mm min.

This requirement must be verified using a parallel-pipped template of dimensions X 200 x Y 150 x Z 100 mm.

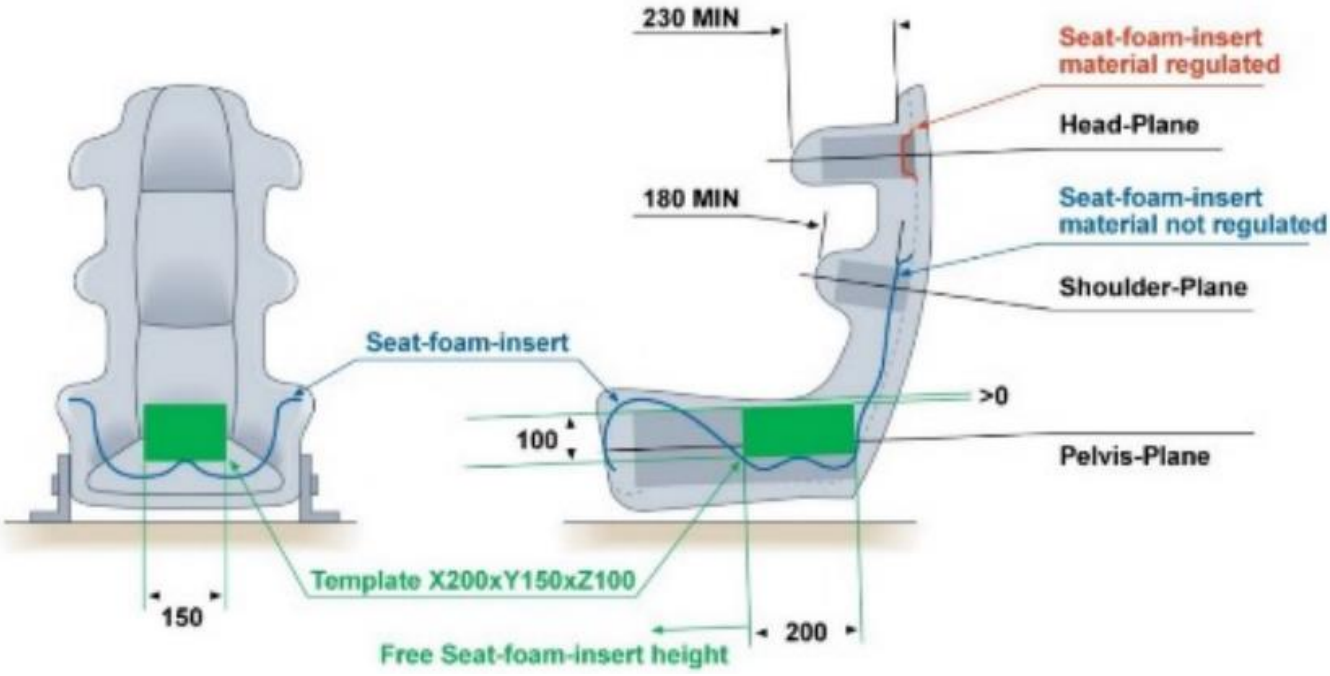

With the driver seated in his normal driving position, the lateral distance between the helmet and the side head support (measured at 150 mm from the forward face of the side head support) must not be greater than 40 mm, and may be adjusted by means of additional foam. The material of the foam extension must be the same as that in the head support of the given seat. The mounting of the foam extension must be approved by the FIA.

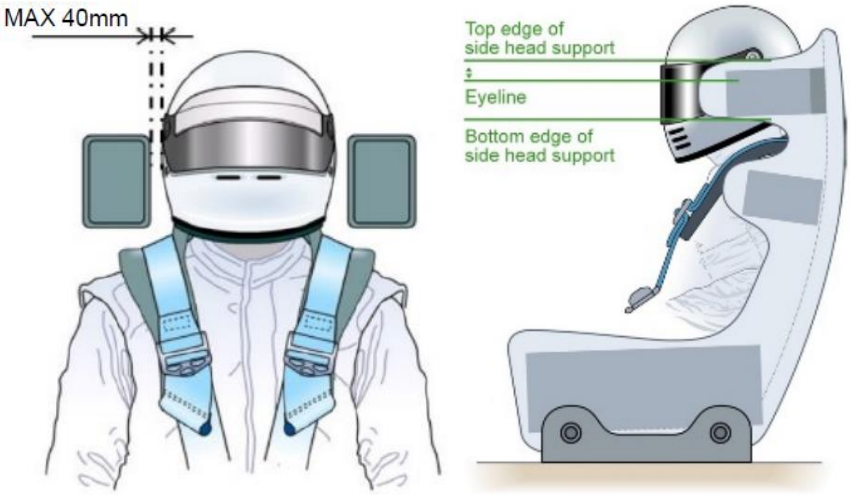

If the homologated attachments or supports are changed, they must comply with the provisions of FIA Article 253-16.

14.7 Rear View Mirrors

The car must be fitted with two rear view mirrors original to the Homologation Form.

The Scrutineers must be assured through a practical demonstration that the driver, seated normally, can clearly see the vehicles following him.

To this end, the driver will be asked to identify letters or figures, 15 cm high and 10 cm wide, displayed at random on boards placed behind the car according to the following instructions:

1. Height: Between 40 cm and 100 cm from the ground.
2. Width: 2 m one side or the other of the longitudinal centerline of the car.
3. Position: 10 meters behind the centerline of the rear axle of the car.
4. Alternate methods of testing driver visibility may be used.

14.8 Master Switch

The driver, when seated normally with the safety belt fastened and the steering wheel in place, must be able to cut off all the electrical circuits and stop the engine by means of a spark-proof master switch. The witch must meet the following criteria:

1. Spark-proof breaker switch
2. Accessible whilst belted in seat
3. Exposed Terminals insulated
4. Use electrical symbol Decal

Electrical Master Switch

Typical Master Switch Decal

This switch must be clearly marked by a symbol showing a red spark in a white-edged blue triangle and be accessible by the driver with his safety belt fastened. There must also be an exterior switch, which is capable of being operated from a distance. This switch must be located at the lower part of the windscreen pillar.

14.9 Towing Eyes

All cars will be equipped with a rear and front towing device for all events that meet the following criteria:

1. It will be clearly visible and painted yellow, red or orange.
2. It must allow the passage of a cylinder with a diameter of 60 mm.
3. It must allow the car to be towed on a dry surface (concrete or asphalt), by applying traction on a plane parallel to the ground, with an angle of plus or minus 15 degrees to the longitudinal centerline of the car.

This check, which may take place during preliminary scrutineering, must be carried out with the wheels blocked by means of the main braking system.

The car must be fitted with tires of a type identical to that used during the event.

15 SAFETY STRUCTURES

15.1 Safety Cage

The safety cage must have no more than six mounting points, except if supplementary mounting points become necessary because of the use of the reinforcements allowed by the SRO Toyota GR Cup Bureau. The safety cage must be certified or homologated by an ASN or homologated by the FIA.

The cage used must be defined in VO.

An authentic copy of the homologation document or certificate, approved by the ASN and signed by qualified technicians representing the manufacturer, must be presented to the event's scrutineers.

Inside the cockpit, the passage of the following elements between the side members of the bodyshell and the safety cage is forbidden:

1. Electric cables
2. Lines carrying fluids (except windscreen washer fluid)
3. Lines of the extinguishing system.

16 FUEL

16.1 Fuel Specification

The fuel must comply with FIA Article 252-9.1 and respect the Sporting Regulations.

16.2 Air

Only air may be mixed with the fuel as an oxidant.

17 INBOARD CAMERA

An inboard camera system homologated by the Toyota GR Cup Series organization is mandatory.

The installation of this system must be made in strict accordance with the corresponding instructions and must work at all times during the Event. All competitors are themselves responsible for installing the cameras and the correct functioning thereof.

The view of the inboard camera must contain:

1. A dash plaque with car number and driver last name.
2. The Lumirank Driver Information Display.
3. A view out the front of the car with proper contrast setting allowing the internal and external to both be clear and visible.

18 FINAL TEXT

The final text of these regulations is the English version, which shall be used should any dispute arise over their interpretation.